CB1S 齿轮泵
CB1S GEAR PUMPS

德力液压 Deli®

简介 General Description

CB1S 齿轮泵系高压小排量齿轮油泵，由一对高强度齿轮、轴套、泵体、前盖、后盖 等主要部件组成，具有美国STN安装尺寸，轴向间隙由高精度浮动轴套自动补偿，使得CB1S齿轮泵具有高的机械效率和容积效率，该泵噪音低、可靠性高，广泛应用于卡车的液压系统，举升和传送机械，矿山机械，农业机械等。

The CB1S gear pump consists of a gear pair supported by two aluminum bearing blocks, a housing, front cover and rear cover.Its STN mounting dimension enable it to enjoy a good market share in the US and European countries. The axial clearance can be automatically compensated by the bearing blocks. The features of CB1S pump are simple structure, high mechanical and volumetric efficiency low noise level as well as high reliability. It is widely used in the hydraulic system of truck, lift and transport machinery, mine machinery, and agriculture machinery,etc.

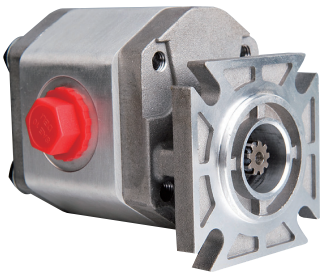

型谱 Order Code

CB1S - F * * * *

20MPa	额定压力 Rated Pressure
1.3～13 mL/r	排量 Displacement

空白或S Omit or S	SAE油口 SAE O-ring boss
A	管螺纹(BSPP) Gas Threaded Ports(BSPP)
B	公制螺纹 Metric Threaded Ports

油口形式 Port Configurations

轴端形式 Shaft Option	空白 Omit	9齿花键 9T Spline
	A	平键 Flat key

旋向 Direction	空白 Omit	右旋 CW
	F	左旋 CCW

外形尺寸图 Outline Dimension

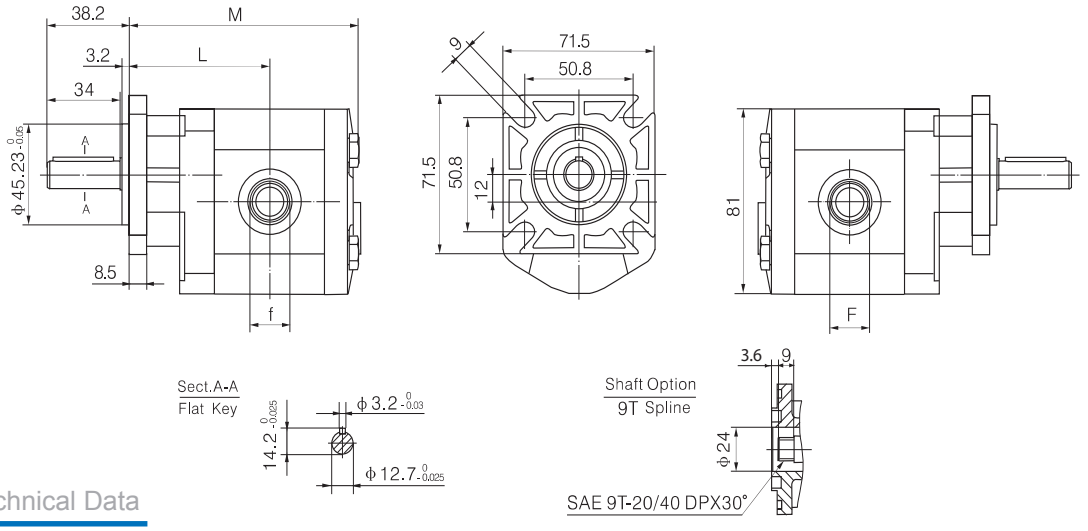

技术参数 Technical Data

Model 型号	Displacement 排量 mL/r(in³/r)	压力(MPa) pressure P1	P2	P3	转速(RPM) pressure Rated	Max	尺寸 Dimension L(mm)	M(mm)	F 进油口(Inlet)	f 出油口(Outlet)
CB1S-F1.3 *	1.36 (0.083)	20	25	28	2000	4000	58.8	98.8	SAE 口 SAE port 3/4-16UN BSPP 口 BSPP port G1/2" 公制口 Metric port M18X1.5	SAE 口 SAE port 9/16-18UN BSPP 口 BSPP port G3/8" 公制口 Metric port M14X1.5
CB1S-F2 *	2.05 (0.125)						59.8	100.8		
CB1S-F2.7 *	2.74 (0.167)						60.8	102.8		
CB1S-F3.2 *	3.42 (0.209)						61.8	104.8		
CB1S-F4 *	4.10 (0.250)						62.8	106.8		
CB1S-F5 *	5.13 (0.313)						64.8	109.8		
CB1S-F6 *	6.16 (0.376)						65.8	112.8		
CB1S-F7 *	7.52 (0.459)	18	20	22		3500	67.8	116.8	7/8-14UN G3/4" M22X1.5	3/4-16UN G1/2" M18X1.5
CB1S-F9 *	9.23 (0.563)					3000	70.3	121.8		
CB1S-F10 *	10.95 (0.668)	15	18	20		2500	72.8	126.8		
CB1S-F13 *	13.68 (0.835)					2000	76.8	134.8		