LVA1 型劈木机阀
LVA 1LOG SPLITTER CONTROL VALVE

德力液压 Deli®

简介 General Description

LVA1 型劈木机阀是通过手柄的动作使阀芯做轴向移动从而对油路进行切换的直动式换向滑阀。此劈木机阀自带过载保护阀，结构紧凑，控制灵活，使用可靠，专用于劈木机的油路控制，能使劈木机快速、平稳工作，并且复位压力可调。

The LVA1 log splitter coonsists of a manually-operated 3 positions spool,a bulit-in relief valve and detent device with the spring centered function in one direction and pressure released detent function in the other direction.The detent deviceallows the spool automatically kick back to neutral position when cylinder completes its retract strobe. The operating handle can be installed in up or down position upon request, The release pressure of detent mechanism is adjustable.

型号说明 Ordering Code

L V A1 - 9 5 N 2 1 A 7

劈木机阀 Log splitter	商品名称 Product name
由生产厂确定 Determined by manufacturer	结构代号 Structure number
95L/min	最大工作流量 Max;flow rate

复位压力 Detent pressure	9	9MPa	可调 Adjust-able
	8	8MPa	
	7	7MPa	
	6	6MPa	
设计序号 Design number	由生产厂确定 Determined by manufacturer		
安全阀压力 Relief valve pressure	21	21MPa	
	19	19MPa	
	17	17MPa	
油口尺寸 Ports configeration	G	P&T:3/4BSP A&B:1/2BSP	
	N	P&T:3/4NPT A&B:1/2NPT	

外形尺寸图 Outline Dimension

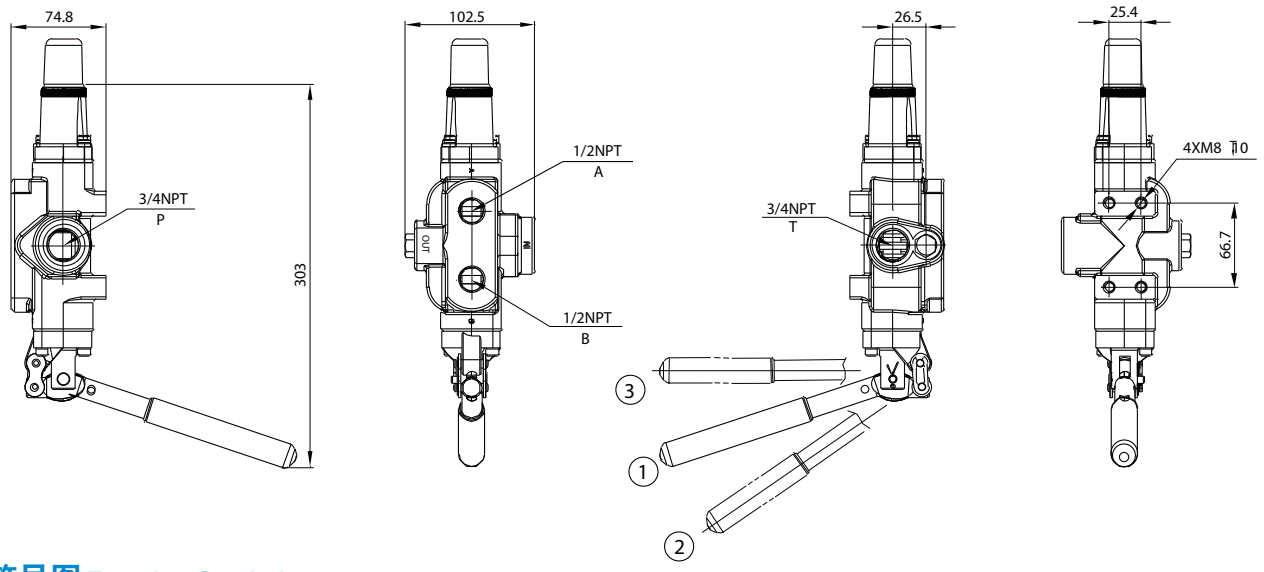
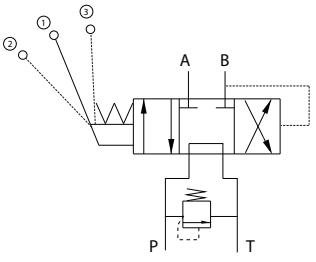
机能符号图 Function Symbol